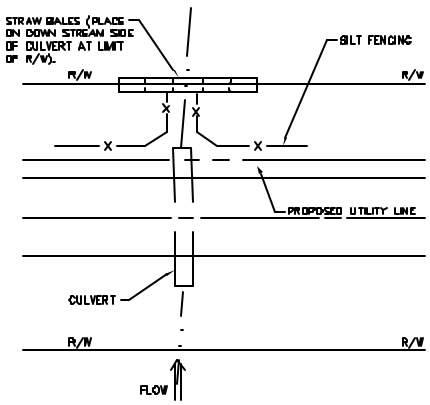

DOWNSTREAM INSTALLATION

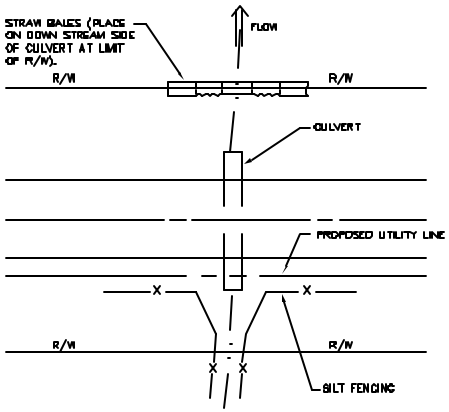

UPSTREAM INSTALLATION

TYPICAL CONTROL BARRIER AT CULVERT/CROSS DRAIN

NOT TO SCALE

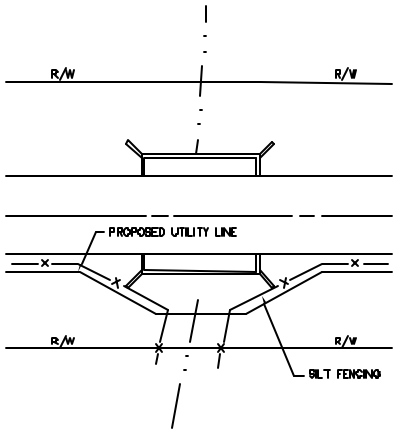

TYPICAL CONTROL BARRIER AT CREEK CROSSING

NOT TO SCALE

SEDIMENTATION AND EROSION CONTROL COMMON PANEL 1B

BERKELEY COUNTY WATER AND SANITATION AUTHORITY
POTABLE WATER & SANITARY SEWER STANDARDS